Info produs balama usa batanta perete/sticla 41.3112.090.xx

FITTINGS

Incarcare dinamica maxim 40 kg
Latime usa sticla
Max 800 mm cu 2 balamale
Max 900 mm cu 3 balamale
Grosime sticla 8-12 mm

Balama usa batanta perete/sticla 41.3112.090.xx - dimensiuni de gabarit si prelucrare sticla

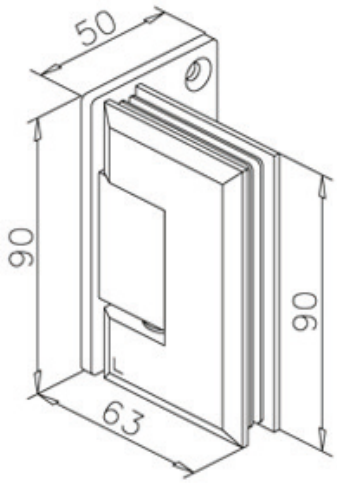

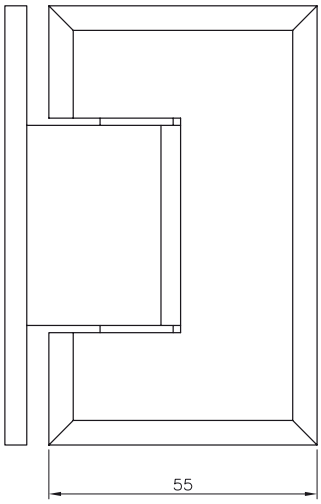

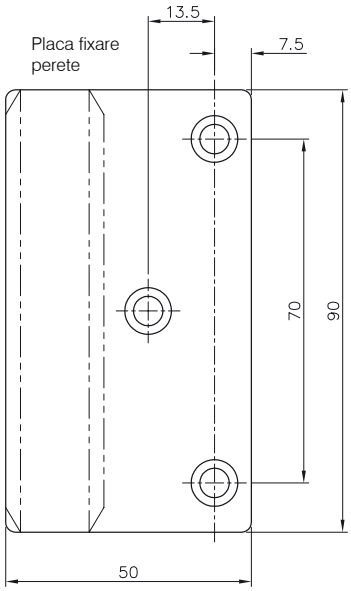

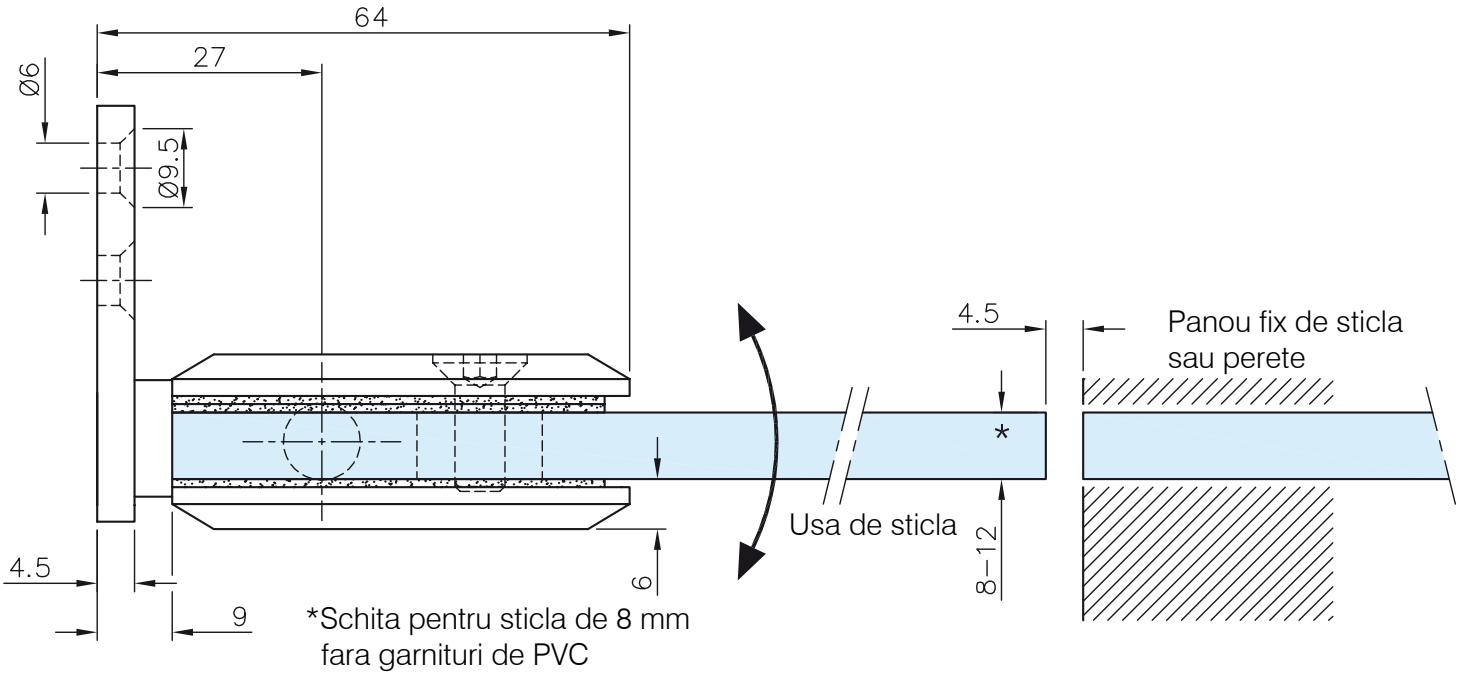

*Schita pentru sticla de 8 mm
fara garnituri de PVC

Info produs balama usa batanta perete/sticla 41.3112.090.xx

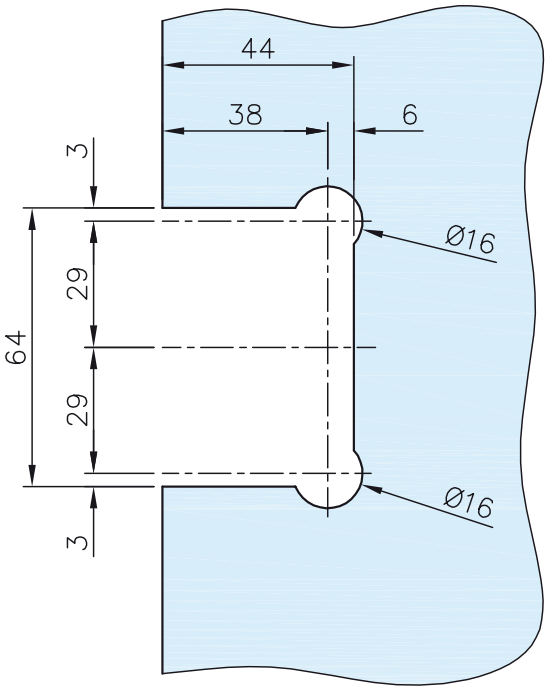

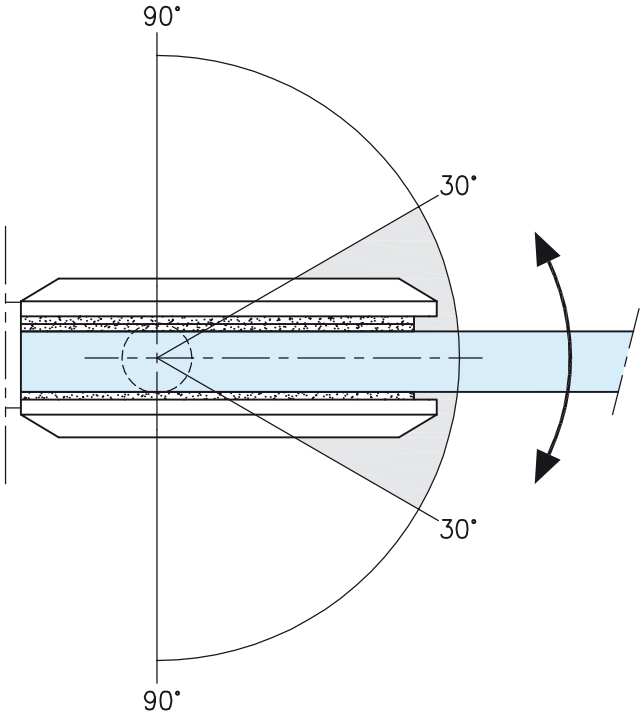
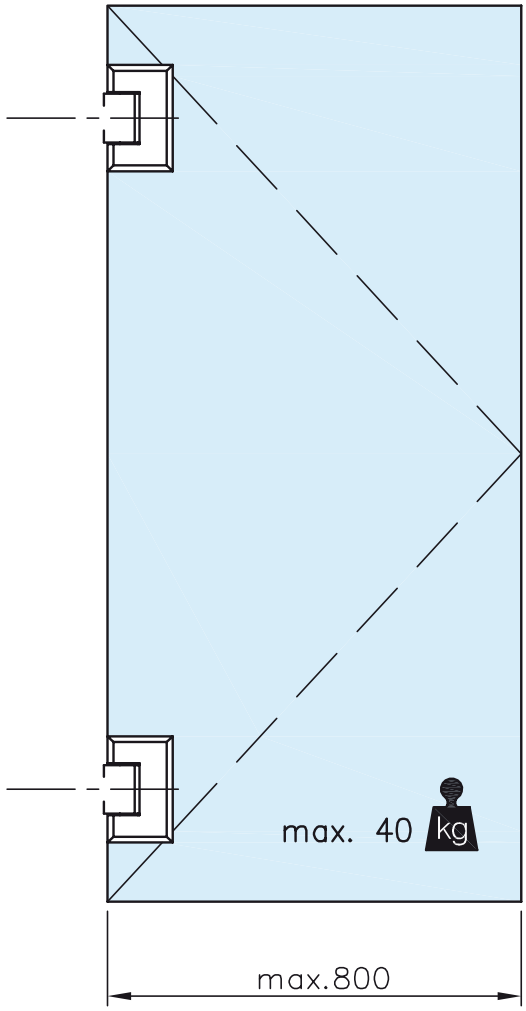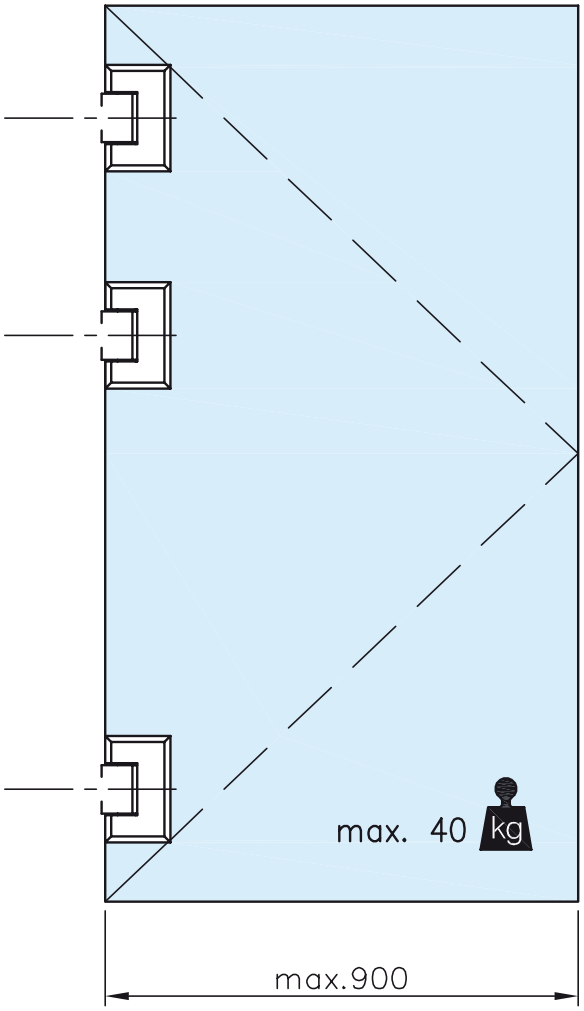
Inchidere automata incepand cu 30°