Info produs sistem de pereti amovibili cu parcare RLD-MW72

railingDESIGN

Incarcare dinamica maxim 150 kg/panou
Latime maxima panou 1200 mm
Latime maxima usa acces 1000 mm
Inaltime maxima panou 3500 mm
Sticla 10 mm

Sistem de pereti amovibili cu parcare RLD-MW72 - detalii constructive si de montaj

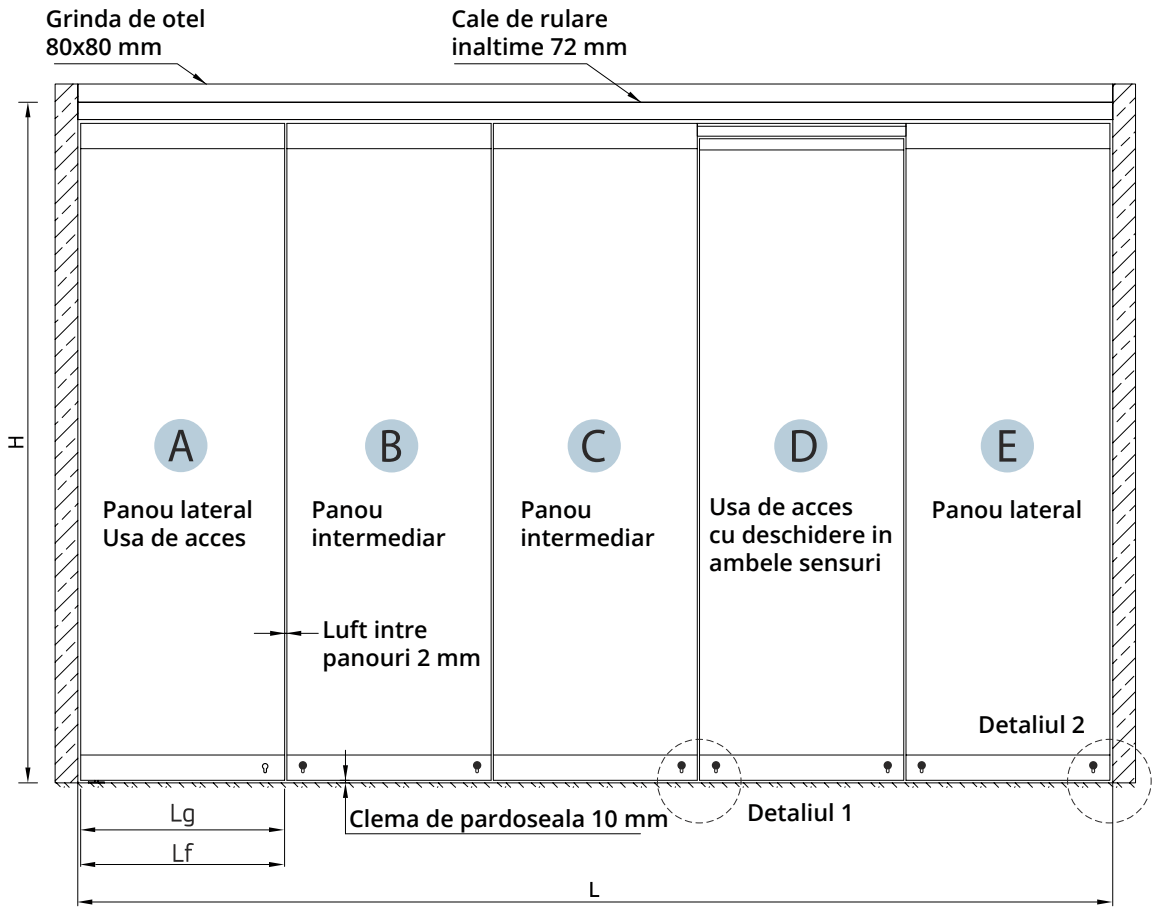

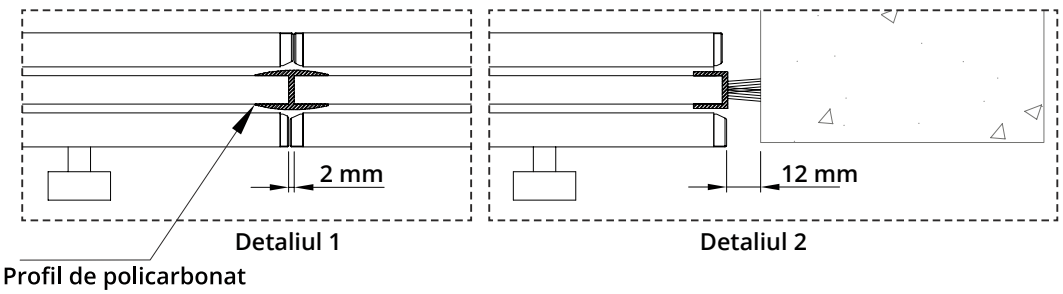

Info produs sistem de pereti amovibili cu parcare RLD-MW72

railingDESIGN

Panou glisant

Inaltime sticla = Inaltime totala(H) - 275 mm

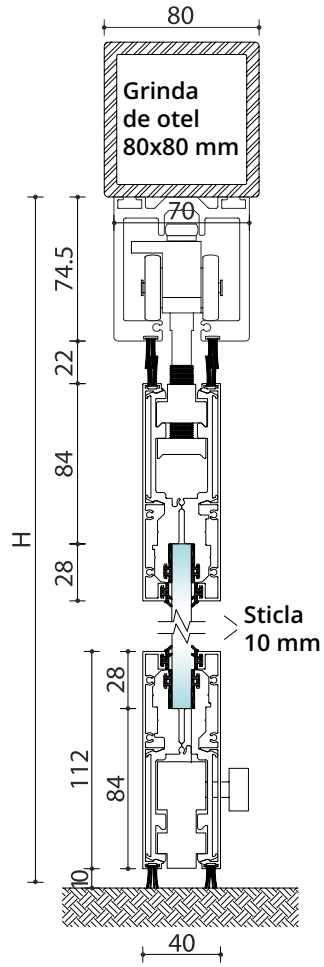

Usa de acces

Inaltime sticla = Inaltime totala(H) - 285 mm

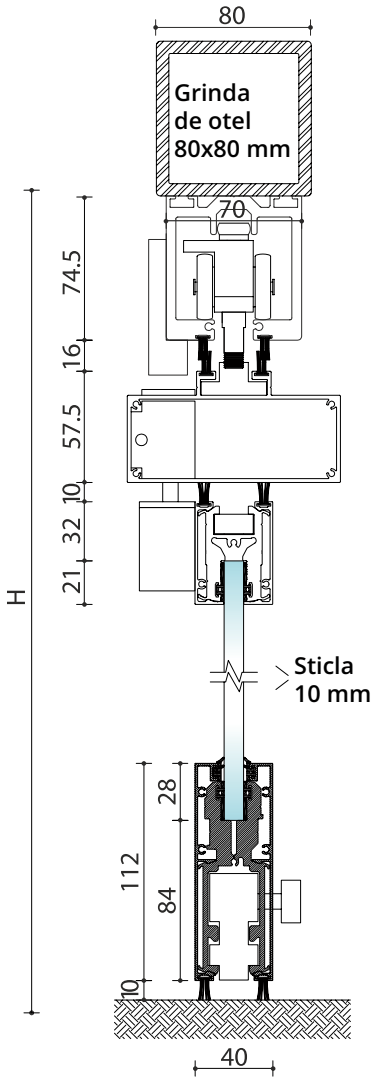

Lg - Latime sticla
Lf - Latime panou sticla
L - Latime totala
n - numar de panouri

Formula de calcul latime sticla

$$Lg=Lf=\frac{\{L-(n-1)x2 - (2x12)\}}{n}$$

0756.578.902 / 0758.404.777 / info@railingdesign.ro

Variante de parcare a panourilor

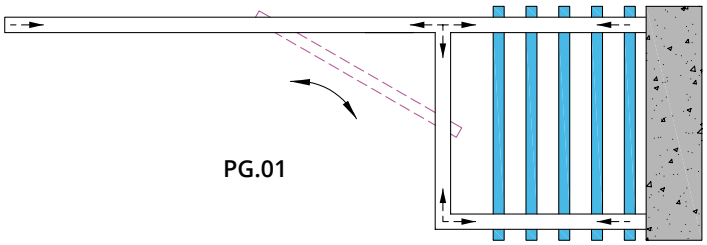

PG.01

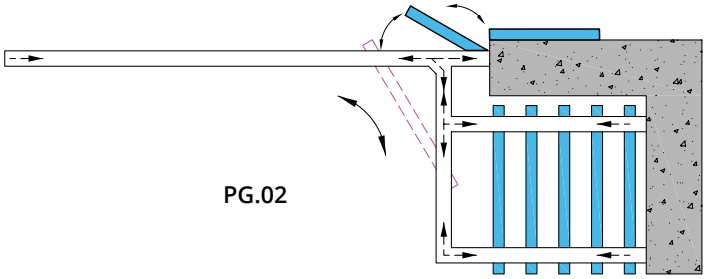

PG.02

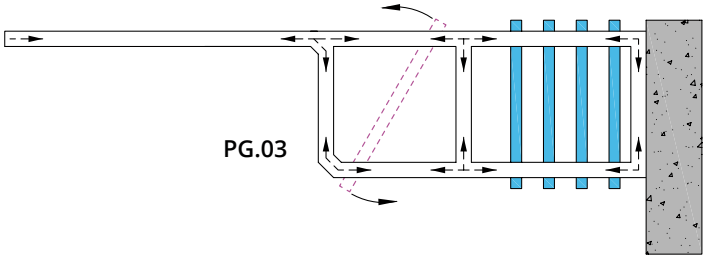

PG.03

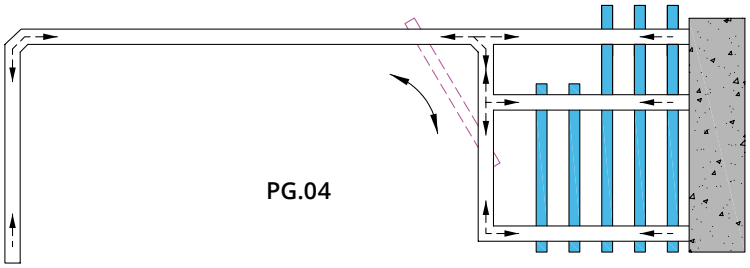

PG.04

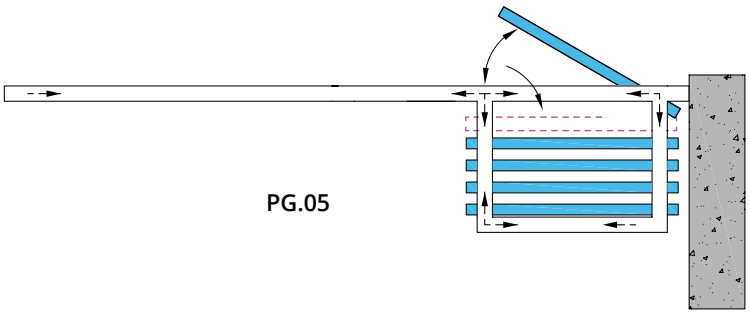

PG.05

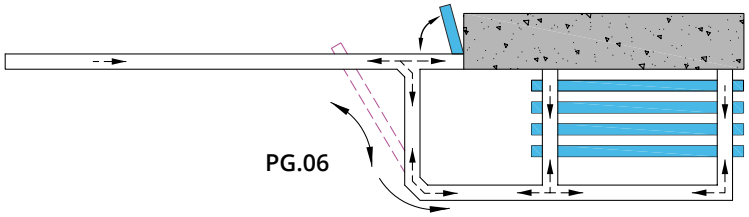

PG.06